Downspout Disconnection:

Keep Rain Out Of The Storm Drain!

Did you know approximately 1,200 gallons of water flow from a single house (~2,000 sq ft) during a 1 inch rainfall? That is a significant amount of water going down the storm sewer system into our streams! Disconnecting a roof drain is a simple and low maintenance alternative that directs stormwater away from storm sewers and promotes infiltration. Directing downspouts onto a lawn or vegetated area will reduce the amount of water and pollution entering a receiving waterbody. Before rerouting your downspout, it's important to check with your Municipality for permission based on their spacing requirements for stormwater runoff. If rooftop disconnection is ideal for you, then the following steps will help towards this goal:

Observe Your Property

- Know your property lines, don't direct runoff toward your neighbors!
- Be aware of the slope of your yard, water will rarely infiltrate on slopes over 10%.
- Measure the amount of lawn available for downspouts to direct water to.
- Keep in mind safety when routing downspouts onto pervious surfaces. Avoid downspout extensions across sidewalks and driveways.

Disconnection Design

- Direct downspouts towards grass or landscaped areas.
- Downspouts can also be connected to rain barrels or drain into a rain garden or stormwater planter.
- The downspout extension should be at least 2ft away from a house without a basement and 6ft minimum from a house with a basement.
- The standpipe which connects into the sewer system should be capped or plugged.
- A splash guard or stone bed can help prevent erosion during intense storm events.

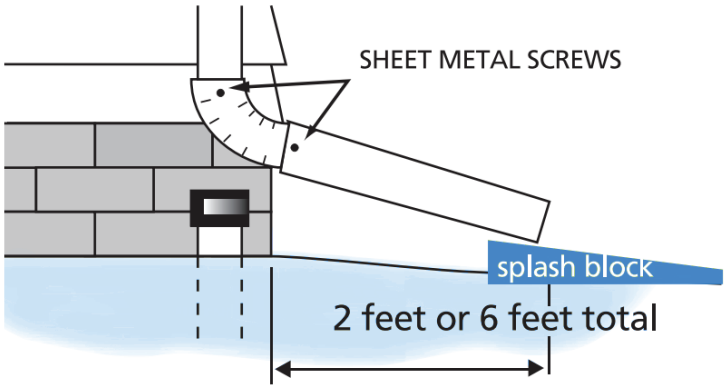

Maintenance

- Clean gutters and downspouts, especially during the fall, to prevent clogging.
- Make sure gutters are sloped to direct water toward downspouts.
- Inspect area in which downspouts drain to; make sure there is no standing water.
- Ensure that elbows and sections of downspout are properly connected.